(12Inch) LED BLUETOOTH SPEAKER LIGHT

Catalog #		Prepared by	LiteHarbor
Project		Date	
Notes			

ORDER MATRIX | Example:BL10-BS01

A B C D

A	Series
BL10-BS01	Led bluetooth speaker light

B	Input Voltage
120V	120VAC

C	Wattage
Watt	14W

D	Dimmable
	Non-Dimmable
DM	Dimmable

Data

Size: 12inch
Input Power: 14W
Input Voltage 120VAC
Frequency: 50/60Hz
Power Factor: >0.98
Lumens:1200LM
Material: ABS/Die Casting Aluminum

Color temperature/ CRI

2700K 80+CRI
2700K 90+CRI
3000K 80+CRI
3000K 90+CRI

Input Voltage

120V
230V
277V
90-305V

LA-LED STAR LIGHTING
1055 CLARK BLVD, BRAMPTON, ON, L6T 3W4 Canada
9057998009

Features

High-fidelity speakers.Compatible phone.Computers and all other Bluetooth devices.Lying on the bed to listening music. listening the cross-talk. listening story and Let the light and music linkage.

Automatically connects: After the first connection. Automatically connect for everytime.

Signal qualities: Using high-end chips. Connection distance is far and without noise. No Caton phenomenon caused by poor signal

Pmma Optical Shade: high Light transmittance.

Bluetooth 4.0 and bluetooth 4.1 both available

Appearance

Like an elephant's face and shape of an alien.Suitable for different age groups. the appearance can do a variety of colors. mesh enclosure Can be gray, Blue,White etc. main body can be black, white, gray etc.

Mounting

Snap in ceiling installation

Listed & Warranty

2-Year Limited Warranty with ETL Listed

Dimension

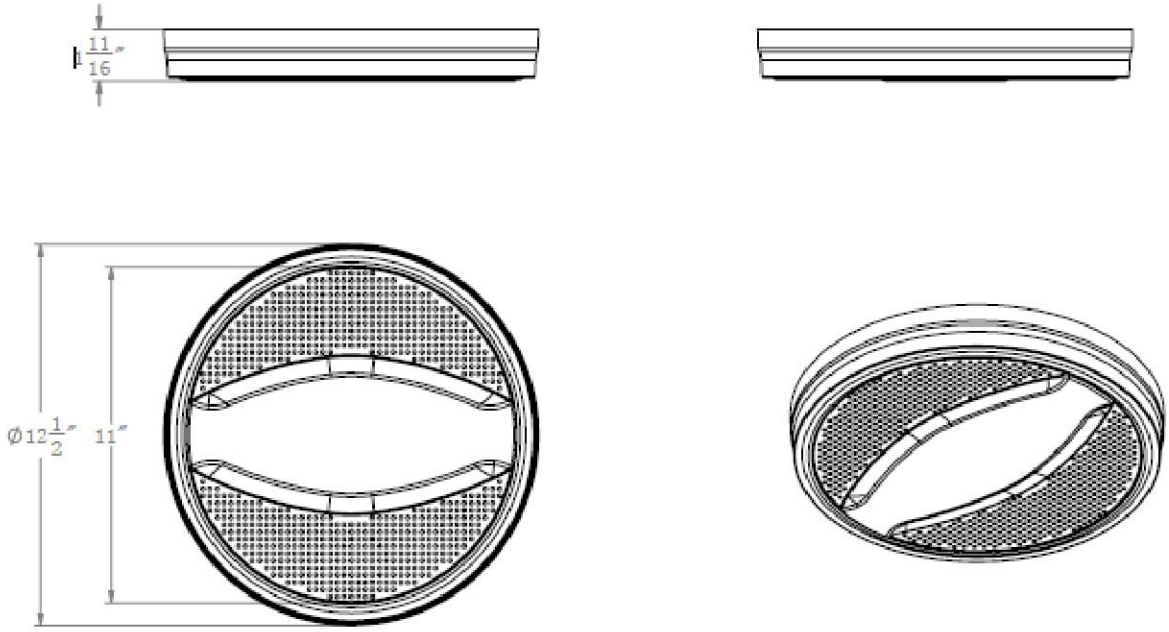

LA-LED STAR LIGHTING
1055 CLARK BLVD, BRAMPTON, ON, L6T 3W4 Canada
9057998009

Application

Suitable for installation in the bedroom, high-rating hotels. upscale mall. living room, lobby, cafes and other personal and family life.