LED DISK LIGHT

Catalog #		Prepared by	LiteHarbor
Project		Date	
Notes			

4 Inch Surface And Recessed Mounted LED Disk Light

Features

- This Disk Light is a universal surface mount trim/luminaire. It replaces bulbs can be flush mounts, recessed trims, and installs on most 4" round or octagon junction boxes (minimum 2-1/8" depth junction box required).
- Provides surface mount light for 4 inch junction boxes or fire rated boxes. It is suitable for use in dry, damp location such as shower room/fire box around.
- 120V operation with TRIAC/ELV dimming down to 10%.
- Flexible mounting with junction box bracket (included), easy installation and instant on make you feel convenient and different from what you used to have for light up your room.
- Can be installed in both a 4" recessed housings, for new construction, remodel and retrofit applications.

Specifications

Lamp Body: The product is made of iron spinning, and can be electroplated or sprayed with high-reflectivity powder. It is beautiful and elegant. It can be used for a long time without discoloration, and its light uniformity is extremely high.

Light Source: Using famous brand LED chips, superior performance, life rated for 30,000 hours at 70% lumen maintenance.

Driver: AC line voltage scheme is adopted to effectively reduce the size and weight of the lamps , long power supply life, low electromagnetic interference, low energy consumption and high performance.

Diffuser: The use of high transmittance diffuser ensures that the light is uniform, delicate, soft and non-irritating, and ensures high light transmission effect while effectively preventing glare.

Applications

Apply to automotive and parking, education, government, healthcare, hospitality, offices and banks, religious, retail.

Parameter List

Watt	10W
Voltage	AC 120V
Frequency	50/60 Hz
PF	>0.95
Dimming	Non-Dimming/TRIAC Dimming
CRI	80+/90+
CCT	3000/4000/5000/6500K

Listing / Warranty

ETL listed to US and Canadian standards for damp location W/Feed through.

3 Year Limited Warranty.

Packing

Inner Box: 160*160*40 mm 1 PC/Box

Carton: 50*33.5*18.5 cm 24 PCS/Carton

Dimension

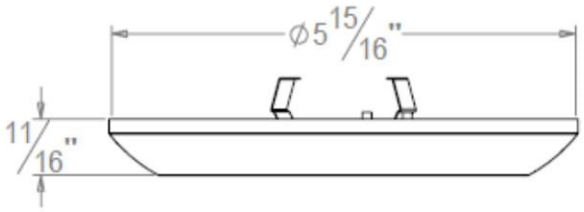

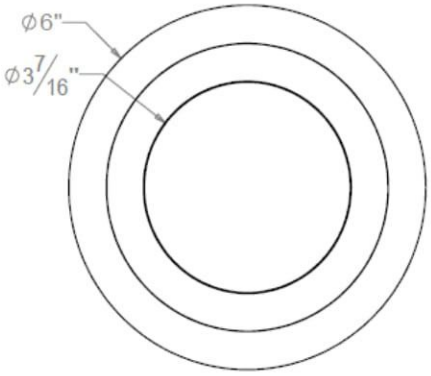

Ordering Guide

Series	Lumen	CCT	CRI	Dimming	Finish
☐ BL4-003-2	☐ 550lm	☐ 3000K	☐ 80+	☐ Non-Dimming	☐ Black
LED Disk Light		☐ 4000K	☐ 90+	☐ TRIAC Dimming	☐ White
		☐ 5000K			☐ Satin Nickel
		☐ 6500K			

1055 CLARK BLVD, BRAMPTON, ON, L6T 3W4 Canada
9057998009

Installation Instructions

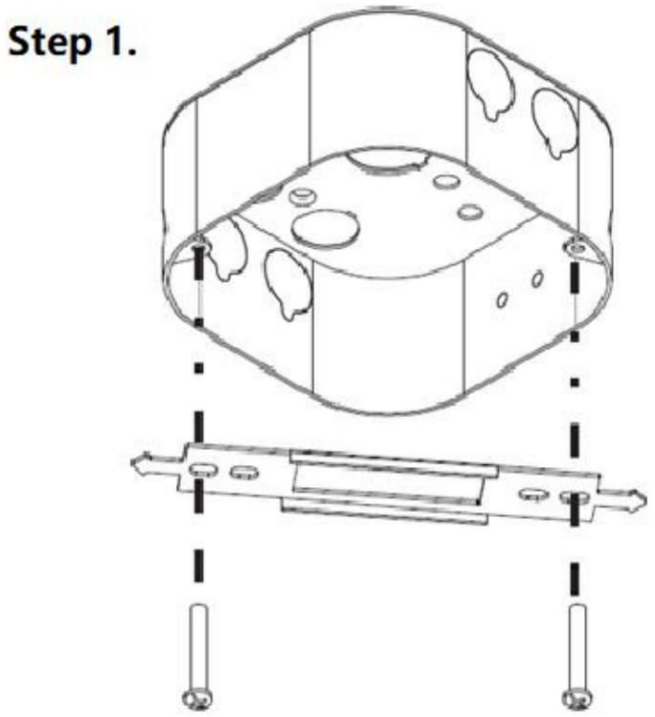

Step 1.
Place the cross bar over the outlet box. Insert mounting screws through the slots in the cross bar and then tightly secure the mounting screws into the outlet box.

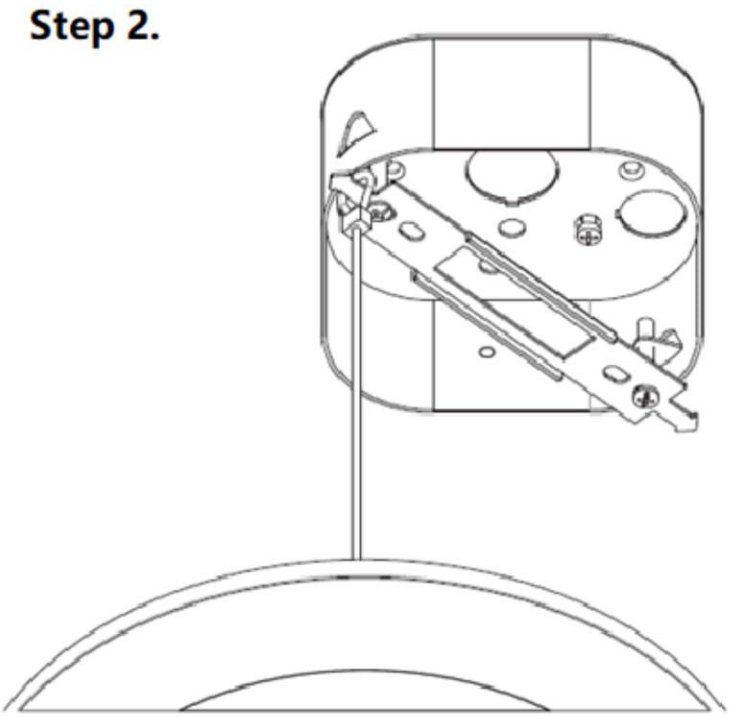

Step 2.
Hang one end of the safety rope on the ceiling bracket and hang the disk light.

Step 3.

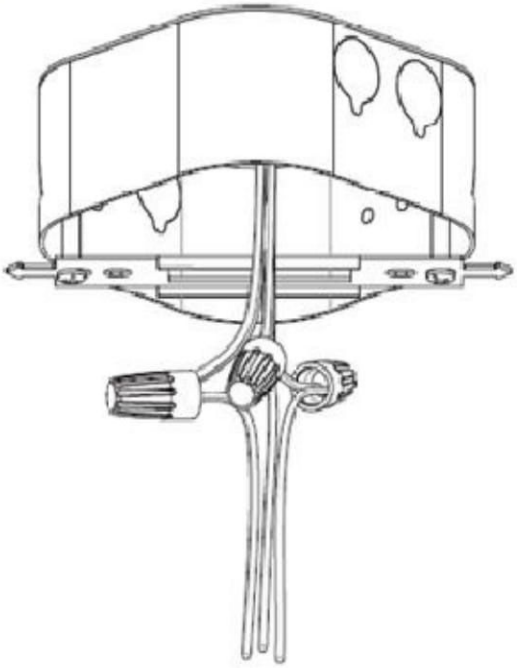

Step 3.
Connect supply wires to wires in fixture wiri box.with proper size wire nuts or push wires into"push-in"connector. Connect white to white, black to black, and green or bare copper wire to bare copper wire.

Step 4.

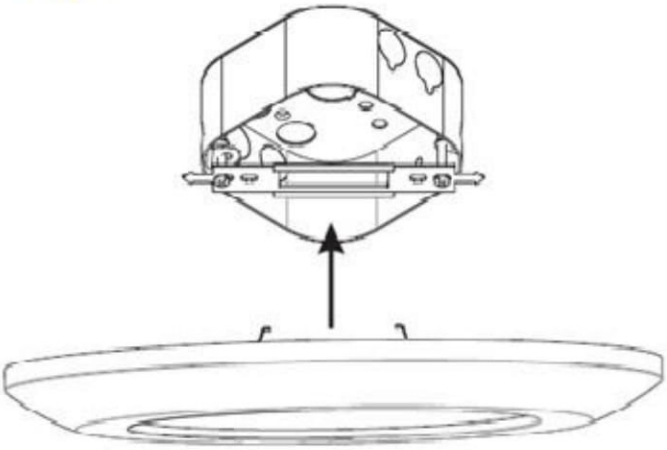

Step 4.
Hand the wire cable in the notch of the cross bar, andthen insert the fixture's clip to the center hole of cross bar.