BL4-S301
4" Super-thin Square LED Recessed Panel Light

Catalog #		Prepared by	LiteHarbor
Project		Date	
Notes			

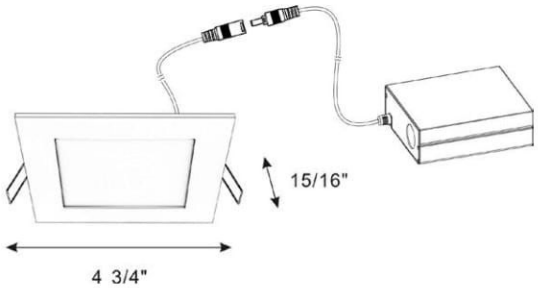

4" Super-thin Square LED Recessed Panel Light

Description

This ultra thin recessed LED Panel is absolutely perfect for tight spaces, soffits and insulated and dropped ceilings.
Recessed 4" Square LED panle with integral driver In connection box. Fits where no other recessed fixture can.
This LED is 10 watts and replaces a 50 watt halogen
Save up to 80% energy for same light output.
The thin Panel profile with spring clips allows for quick and easy installation. Ideal for confined spaces and suitable for damp locations

Features

Available in all 4" Square openings.
Retrofit or New Construction
Install Directly Under Joists, Maximum Layout Flexibility
Comes with Junction Box & Driver,No Housing Required
Fast & Easy To Install

A B C D E F G

Item No.: BL4-S301

A	Series
BL4-S301	4" Square & Remodel
BL4-S301-NC	4" Square & New Construction

B	Input Voltage
	120V
277	277V
U	120-347V

C	Color Temperature
27	2700K
30	3000K
40	4000K
50	5000K
60	6000K

PANEL LIGHT

1055 CLARK BLVD, BRAMPTON, ON, L6T 3W4 Canada
9057998009

Mounting

Cut Hole In Ceiling And Snap Fixture In Opening With Attached Spring Clips. 2" Above Ceiling Clearance Required For Driver.

Trim Option

Appearance

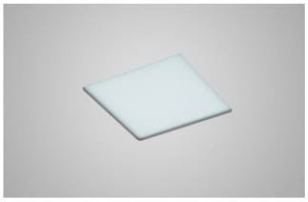

D	Dimmable
	Non-Dimmable
DM	Dimmable

E	Finish
WH	White
BK	Black
SN	Satin Nickel

F	Mounting
	Remodel
	New Construction

G	Trim
	Trimmed
	Trimless

Light Distribution Curve

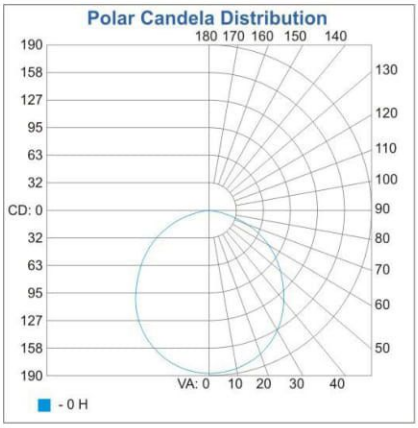

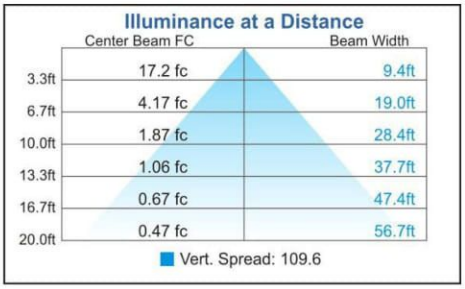

Note: The Curves indicate the illuminated area and the average illumination at a set distance from the LED Down Light.

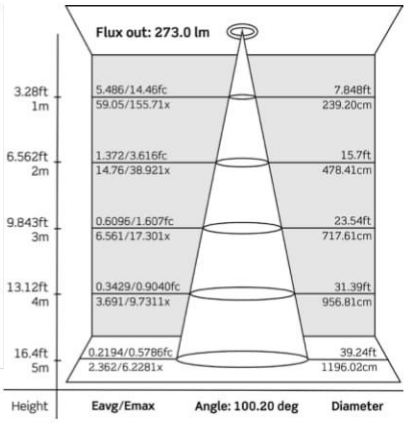

PANEL LIGHT

Specification

Applications	Recessed Ceiling Mount
Wattage	10W
Light Output	680lm
CRI	80+/90+
CCT	2700K-4000K
Driver Input	120V AC or 277V-347V AC 50/60 Hz
Power Factor	0.98
Dimming	TRIAC Dimmers 10%-100% (120V only)
Location	Insulated Ceiling & Damp Locations
Lifespan	50,000 Hours at 70% Light Output
Certification	ETL/ENERGY STAR
Warranty	5 Year Limited for Fixture & Driver

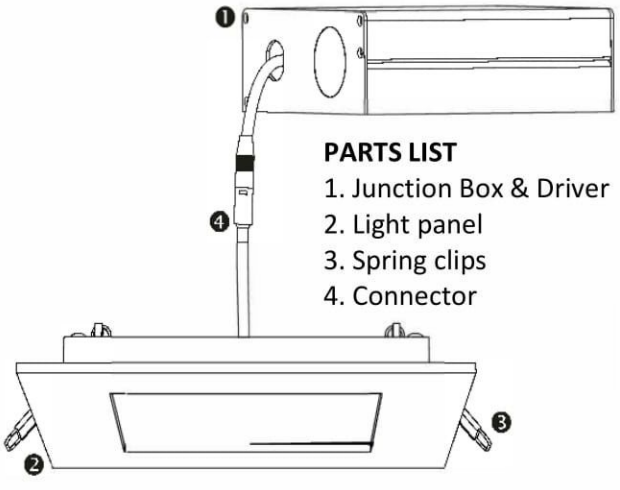

Packing

CTN Size:480X305X285mm

Inner Box Size: 145X75X130mm

24PCS/CTN

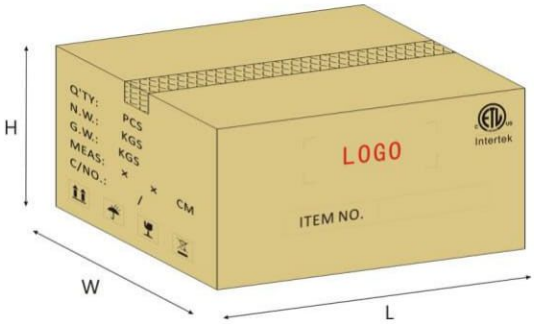

PANEL LIGHT

Fig. 1

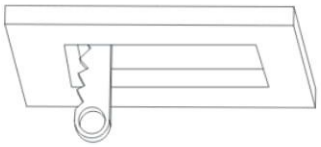

Hole diameter/Diamètre de perforation:	
PROF41 (4")	4 1/4" x 4 1/4" ± 1/8" (110 x 110 ± 3mm)
PROF61 (6")	6 1/4" x 6 1/4" ± 1/8" (159 x 159 ± 3mm)

Installation Instructions

1. Turn power OFF from the electrical panel prior to installation.

2. Determine the location for installation and cut ceiling hole in accordance with cut-hole dimensions. Refer to *Hole Diameter* table for appropriate sizes. (Fig. 1)

3. Open the junction box cover and remove the appropriate knockout(s) on the side panel. (Fig. 2)

4. Insert the electrical supply cable through the knockout and secure with a cable connector (sold separately).

5. Using quick-connect push-in terminals, connect the ground wire to the green wire terminal; black wire to black wire terminal; white wire to white wire terminal. (Fig. 2)

Fig. 2

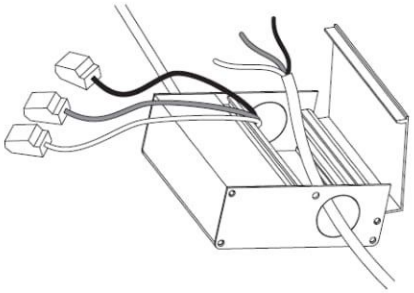

LA-LED STAR LIGHTING

1055 CLARK BLVD, BRAMPTON, ON, L6T 3W4 Canada
9057998009

6. Place all wiring and connections back in to the box and close the cover. Connect the driver to the light panel.

7. Insert junction box through the mounting hole. (Fig. 3)

8. Push spring-loaded clips on the fixture upwards and insert fixture base in to the mounting hole. Release the clips and fixture will be pulled flush to the ceiling. (Fig. 4)

Fig. 3

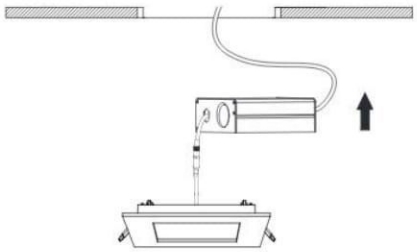
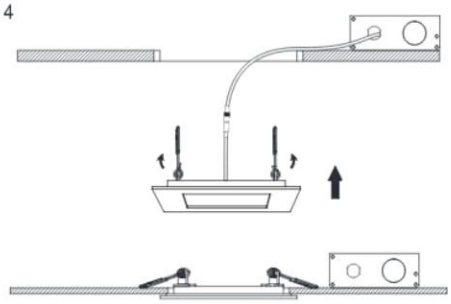
Fig. 4